USE AND MAINTENANCE MANUAL

FREE STANDING MINIPOOL SPA

cod. art. 5050574

EN

Read carefully and keep for future reference

CPA SRL
Via Don Demetrio Castelli 71, 12060 Roddi (CN)
Tel: 0173.615693 | 0173.620643
info@cpa-piscine.it

Ver. 00 – 2025-09-09

Sommario

1. INTRODUCTION 3
2. SAFETY WARNINGS 3
3. TECHNICAL FEATURES 4
4. DIMENSIONS 5
5. CONNECTIONS 6
6. WALL PREPARATION 7
7. SPA EQUIPMENT 8
8. POSITIONING 10
9. SETTINGS 10
10. ELECTRICAL CONNECTION 11
11. INSTALLATION AREAS 12
12. HYDRAULIC CONNECTIONS 13
13. INITIAL FILLING 14
14. TOTAL DRAINING 15
15. EMPTYING THE COMPENSATION TANK 16
16. EMPTYING THE TANK 16
17. USE AND MAINTENANCE – SAFETY WARNINGS 17
18. HOW TO PERFORM A HYDROMASSAGE 18
19. RECOMMENDED TEMPERATURES 19
20. WHICH PRODUCTS TO USE 19
21. K500 CONTROL KEYPAD 20
22. MAINTENANCE AND WATER TREATMENT 26
23. COLD OUTDOOR ENVIRONMENTS 29
24. WINTER SHUTDOWN IN COLD CLIMATES 29
25. WINTER SHUTDOWN IN WARM CLIMATES 30
26. “CHANNEL” CLEANING 30
27. TROUBLESHOOTING 31
28. AUTOMATIC FILL SYSTEM BLOCK 34
29. ELECTRIC PANEL 34
30. ELECTRICAL CHARACTERISTICS 35
31. SPARE PARTS 35
32. WARNINGS 36

1. INTRODUCTION

The installation instructions must be carried out exclusively by qualified personnel authorized to certify the work performed in compliance with current regulations and laws. CPA declines all responsibility for damage to persons, animals, or property resulting from installation carried out by unqualified personnel, in violation of applicable regulations or laws, or not in accordance with the instructions in this manual.

2. SAFETY WARNINGS

Before installing the product, carefully read this manual and keep it in a safe place for future reference by different operators.

If any part is not clearly understood, contact the Manufacturer for further clarification. The product must be installed by qualified personnel authorized to issue the appropriate certificate of conformity according to the regulations in force in the country where the installation takes place.

Unauthorized interventions, tampering, or modifications not expressly approved and not in accordance with this manual may cause damage, injury, or fatal accidents and will void the warranty.

During the installation of the SPA, do not place any objects inside the tub, even temporarily, as they may fall into the drain.

Always use personal protective equipment during installation of the SPA (e.g., gloves, safety shoes, etc.).

3. TECHNICAL FEATURES

Functions	Built-in	Free standing
Hydromassage seats	5	
LED lights	1	

Operating data	Built-in	Free standing
Tub footprint area	Ø 230 cm (Ø 90 1/2")	
Internal tub dimensions	183,4 cm (72 1/4")	
Occupied area	4,15 m^2 (44, 7 ft^2)	
Net tub weight	280 kg	320 kg
Maximum number of people	5	
Operating weight	1935[1] kg	1975[1] kg

Electrical Specifications	Built-in	Free standing
Voltage	230-400 V	
Frequency	50 Hz	
Filtration pump power	200 W	
Hydromassage pump power	1 x 1,5 kW	
Blower power	1 x 700 W	
Electric heater	3 kW	
Ozone generator	5 W	

Caratteristiche idrauliche	Built-in	Free standing
Compensation tank capacity	520 litri	
Overflow capacity	1.130 litri	

Dati di spedizione	Built-in	Free standing
Packaging dimensions	232 x 232 x h.130cm	
Packaging volume	7,5 m^3	
Shipping weight	440 kg	480 kg

[1] Filled with water and with 5 people of 75 kg each inside.

4. DIMENSIONS

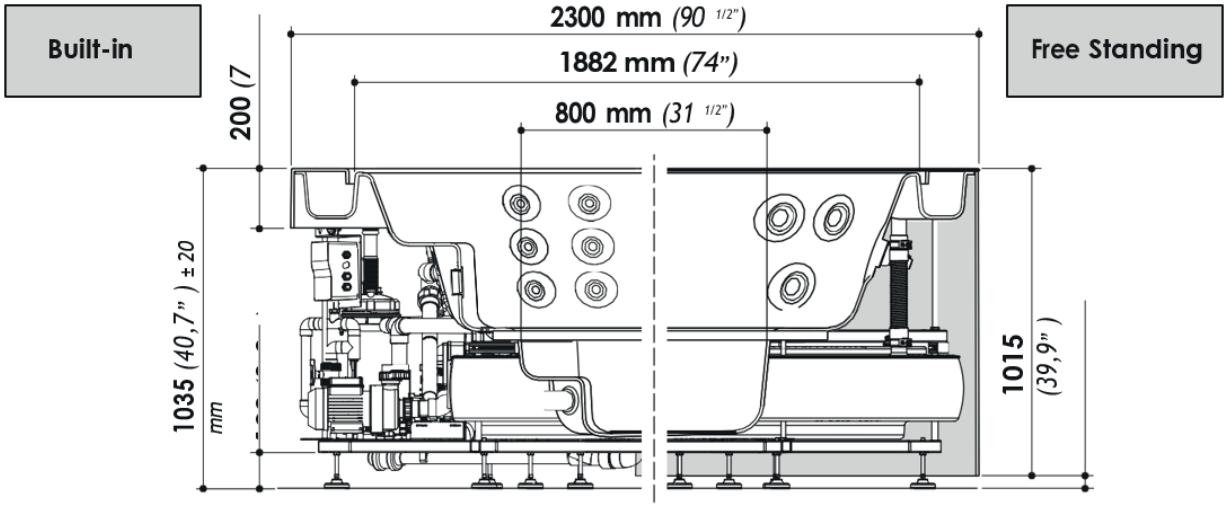

Figure 1

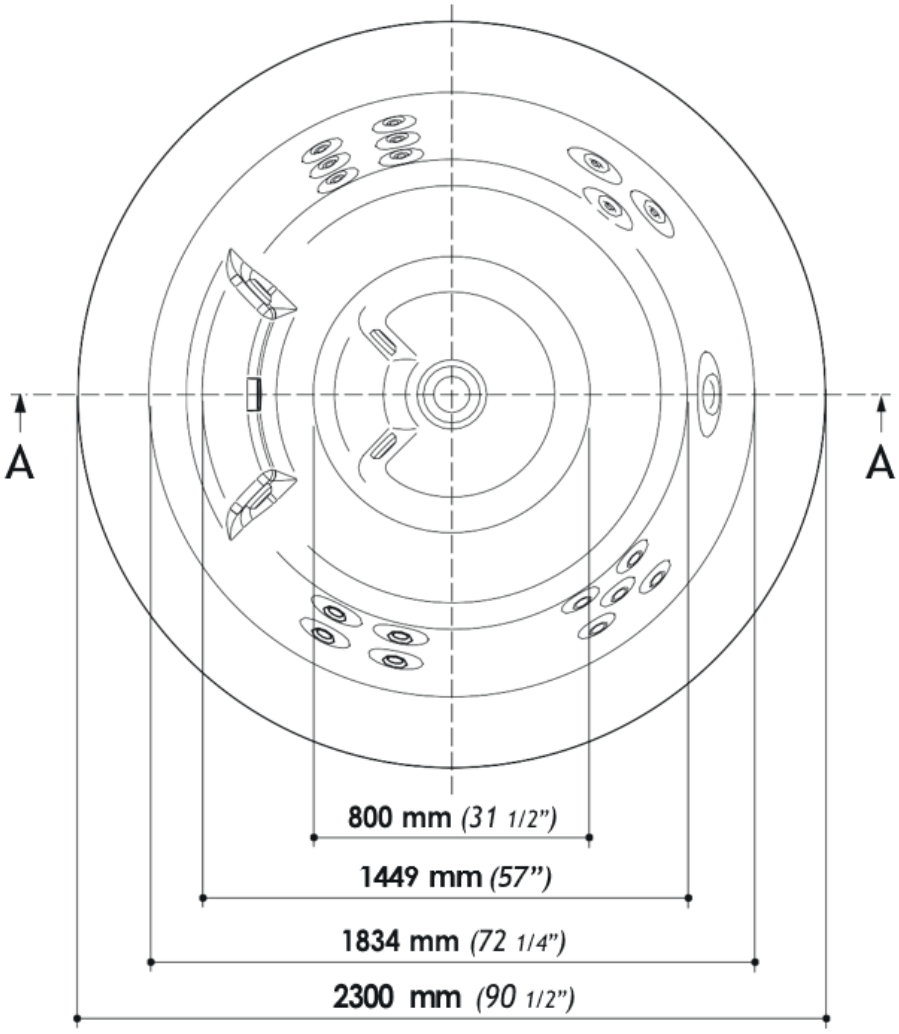

Figure 2

Tolerance ± 0,5 %

5. CONNECTIONS

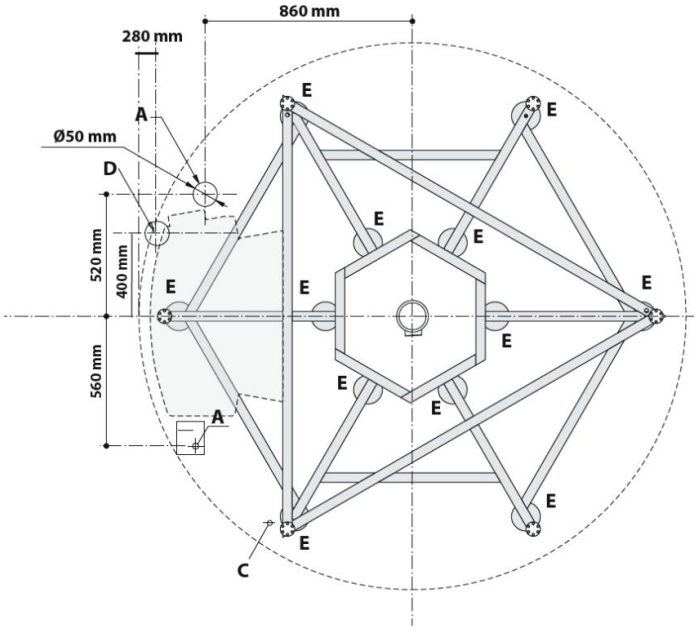

Figure 3

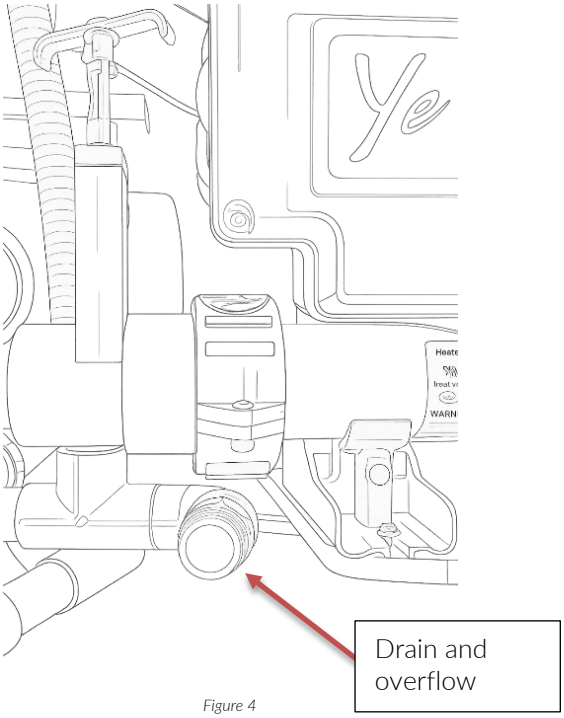

Figure 4

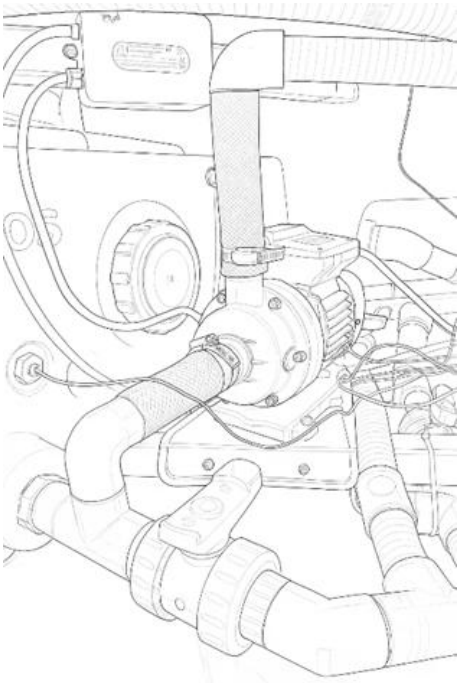

Figure 5 - ozonatore

LEGEND

A = Load line (3/4”).

C = Power supply 230- 400V AC-6,5 kW

230V: 3x6 mm^2 max, cable lenght ≤ 4 m

400V: 5x4 mm^2 max, cable lenght ≤ 4 m

D = Drain and overflow 3/4"

E = Support feet

6. WALL PREPARATION

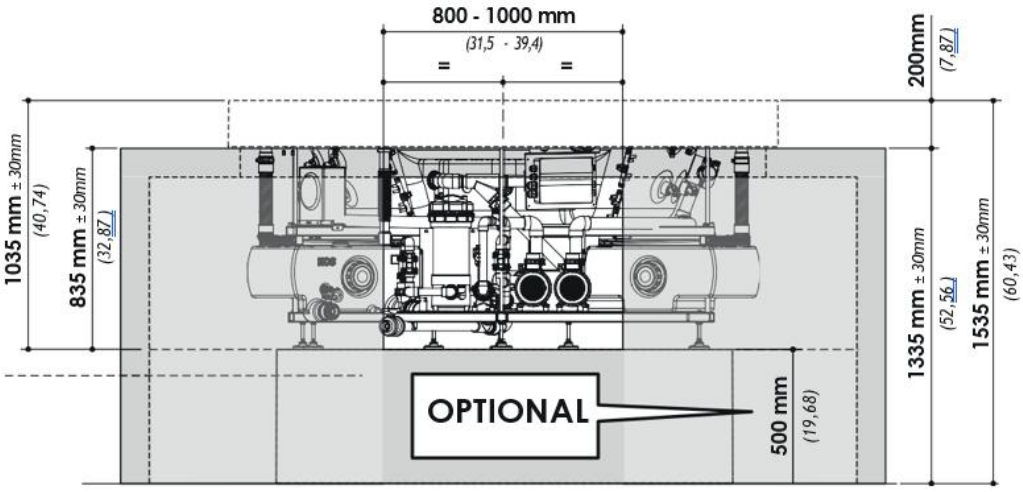

Figure 6

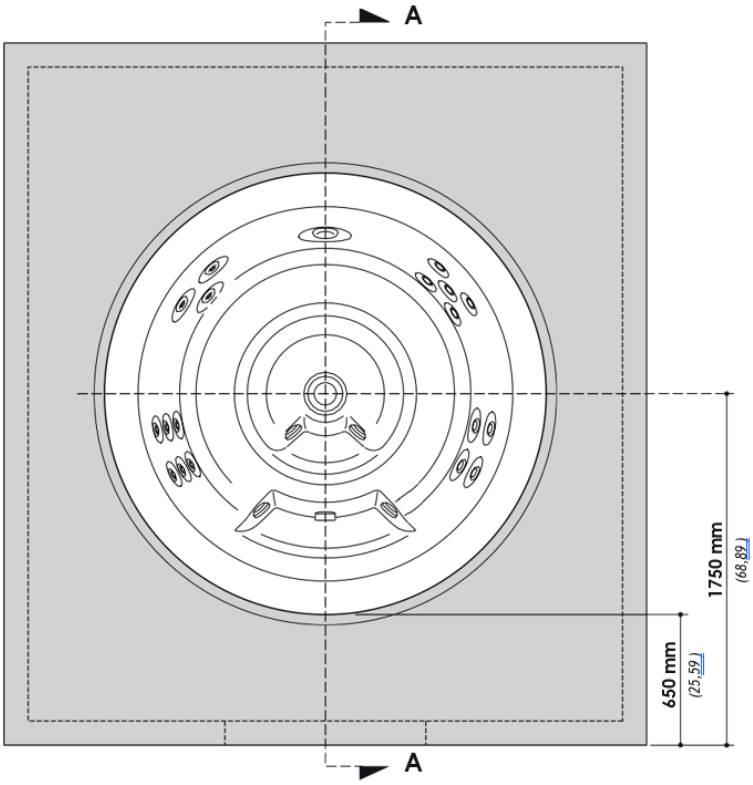

Figure 7

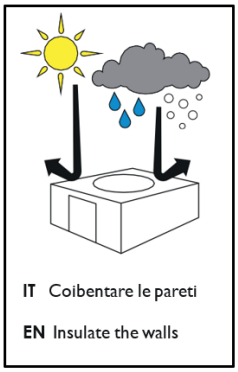

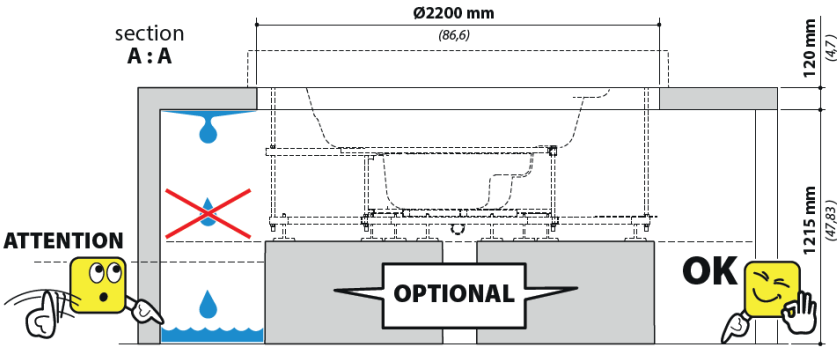

Figure 8

7. SPA EQUIPMENT

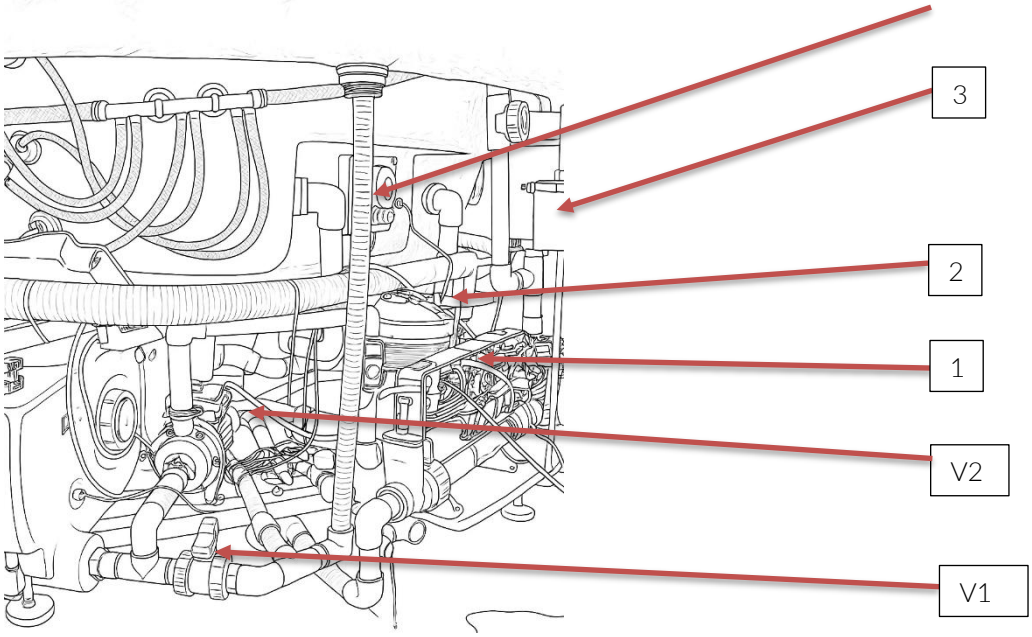

Figura 9

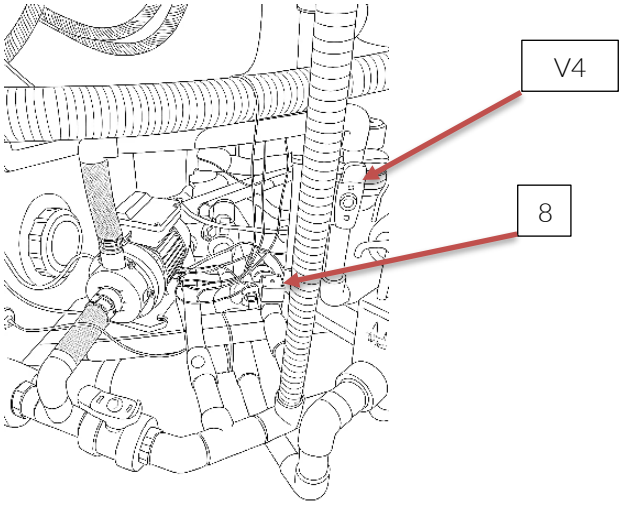

Figura 10

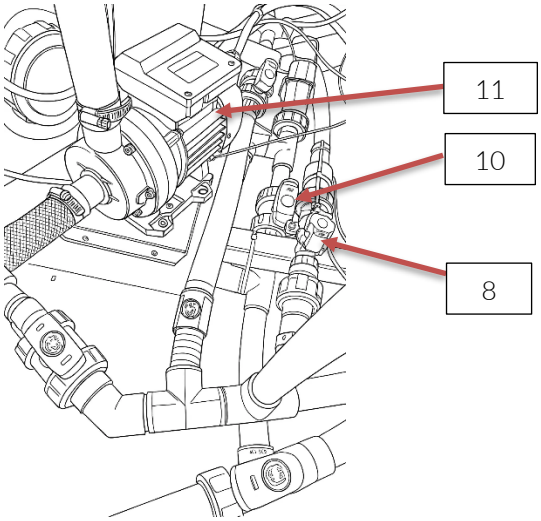

Figura 11

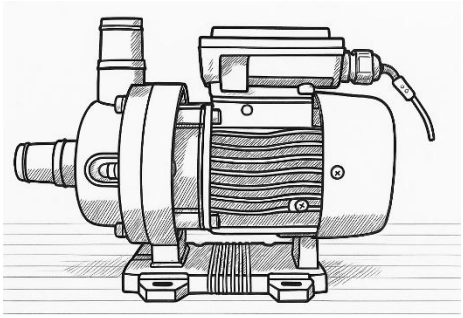

Figura 12 – pompa di circolazione

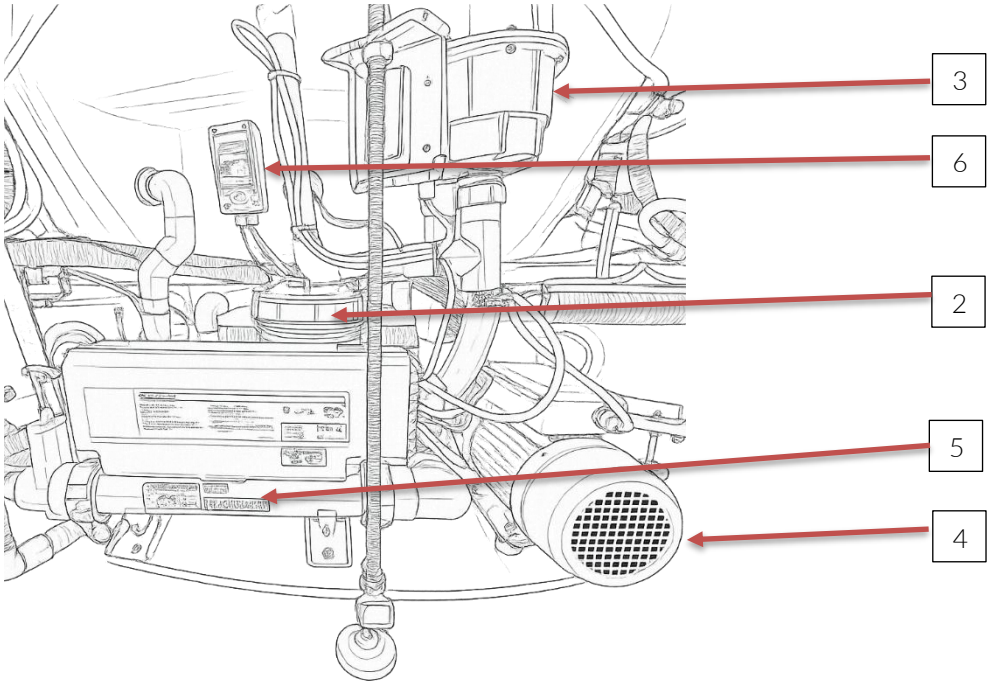

Figure 13

1: Electrical control panel— mod. 600-10809

2: Cartridge filter— mod. 610-12008

3: Blower — mod. 600-10716

4: Hydromassage pump— mod. 600-10714

5: Electric heater— mod. 600-811670

6: Compensation tank water level control module

7: Overflow drain line

8: Fill solenoid valve

9: Compensation tank water level sensor

10: Check valve

11: Circulation pump— mod. 610-11975

V1: Compensation tank drain valve — normally closed

V2: Tub drain valve — normally closed

V3: Bypass flow adjustment valve for ozonator

V4: Shut-off valve for filter and electrical panel[2]

V5: Shut-off valve for filter and electrical panel

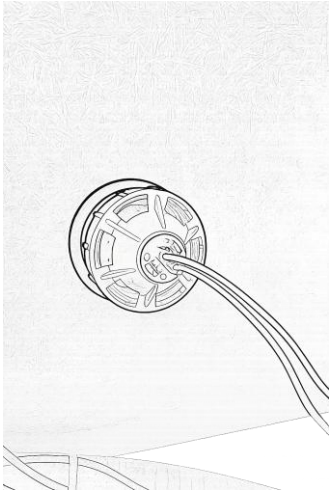

Figure 14 - light

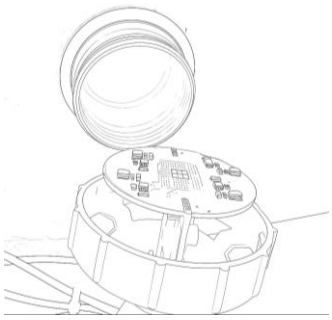

Figure 15 – light bulb

[2] For any maintenance on the filter and electrical panel, shut off both valves.

8. POSITIONING

Remove the top part of the packaging (cardboard and protective bubble wrap). Remove the screws that secure the tub's feet to the wooden pallet.

Handle the tub with extreme care.

Lift it only by the edges or the frame.

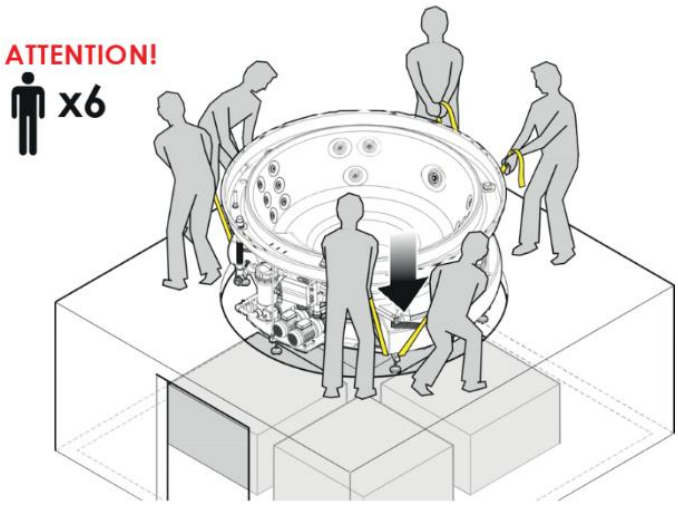

Figure 16

It is strictly forbidden to lift the tub using the pipes or other components (pumps, electronic boxes, etc.).

Place the tub in its final installation position.

9. SETTINGS

Using a spirit level, level the upper edge of the tub by adjusting the rubber feet. Lock the adjustable feet with the appropriate nuts (fig. 2). Prepare the drain fittings for the column and any fittings for hot/cold water. Ensure that the system's power cable is long enough to connect to the tub's control box without any interruptions or intermediate splices.

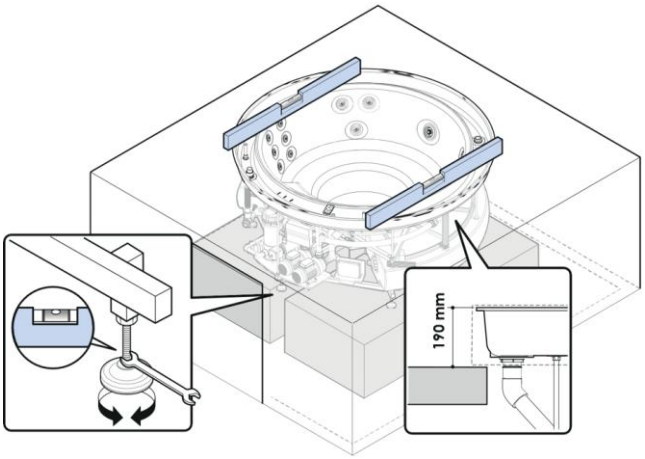

Figure 17

10. ELECTRICAL CONNECTION

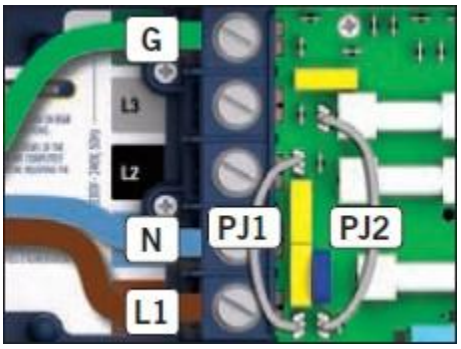

Figure 18

Single-phase

Connect PJ1 betweenP37 and P49

Connect PJ2 betweenP50 and P26

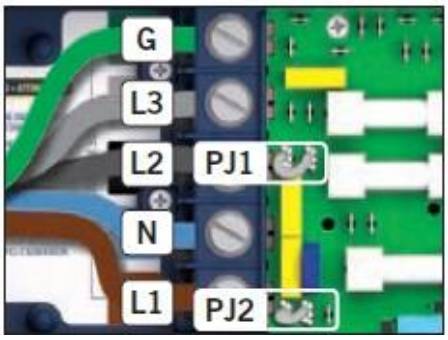

Figure 19

Three-phase with neutral

Connect PJ1 betweenP37 and P38

Connect PJ2 betweenP50 and P49

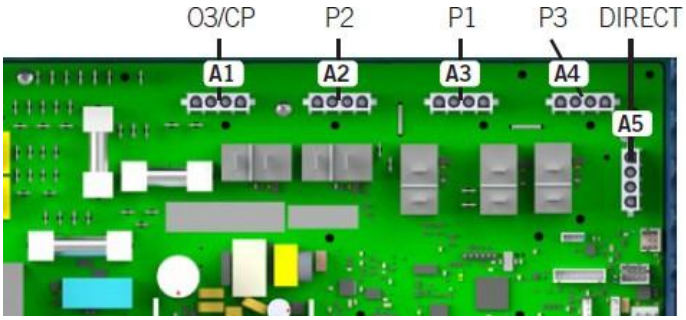

Figure 20

CONNECTION LEGEND

A1: Hydromassage pump

A3: Blower

A4: Ozone and circulation pump

Figure 21

SPLITTER CABLE

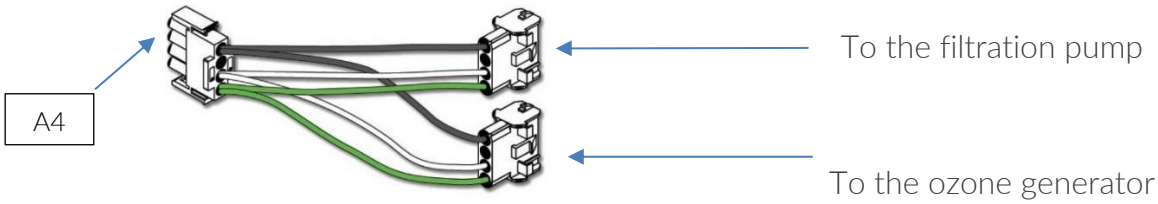

Figure 22

11. INSTALLATION AREAS

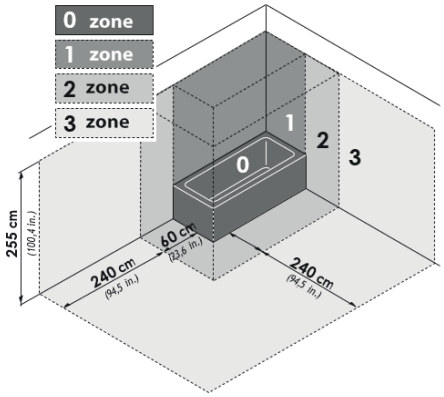

Figure 23

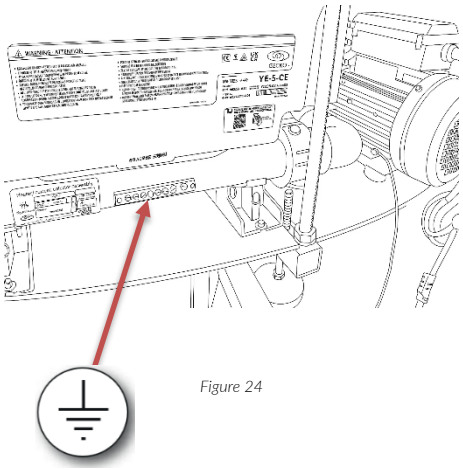

Figure 24

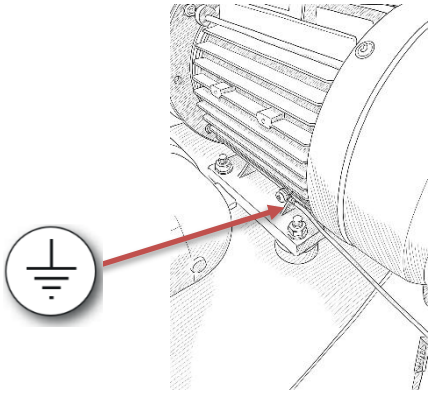

Figure 25

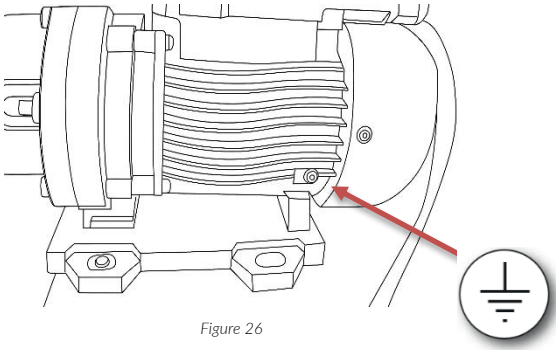

Figure 26

The electrical and grounding system of the property must be efficient and compliant with legal requirements and national standards.
Before connecting the hot tub, the installer must verify that the electrical system complies with the regulations in force in the country of installation and is suitable for the current consumption of the SPA.
The equipment is a Class I electrical device and must be connected to the property's electrical system (equipped with a residual-current device not exceeding 30 mA) in a fixed and permanent manner through an all-pole switch with a contact opening distance that ensures complete disconnection under Category III conditions.
The switch must be installed outside zones 0-1-2, away from possible water sprays or splashes, secured in such a way that it cannot fall into the SPA, and be inaccessible to users of the equipment.
This switch is mandatory as it serves as the main switch for the hot tub and must be turned to the "I" position when the hot tub is in use and to the "O" position once use has ended.
Failure to install the switch may compromise the safety of the hot tub, of which it is an

integral part, and will void both the warranty and the manufacturer's liability for any damage caused by the product.

The tub is equipped with a terminal block marked with the symbols: “N”, “L” and ground, to which the power cable must be connected. The cable must be of the type H05VV-F, three-core with a cross-section of 6 mm² (3x6 for 230V version or 5x4 for 380V version). After passing the cable through the appropriate cable gland, the blue conductor must be connected to terminal “N”, the brown one to terminal “L”, and the yellow-green one to the ground terminal (fig. 18-19).

Tighten the cable gland and position the control unit cover to ensure the required protection rating.

The installer must ensure that the property and, in particular, the bathroom are equipped with an equipotential bonding system for all metallic parts. To this end, the hot tub components, such as the control panel and its heater, the frame, the circulation and hydromassage pumps, must be connected to this system using a conductor from the equipotential bonding system with a cross-section between 2.5 and 6 mm² (fig. 24-25-26).

Any part containing live components—except those powered by a safety extra-low voltage not exceeding 12V—must be inaccessible to users inside the tub.

12. HYDRAULIC CONNECTIONS

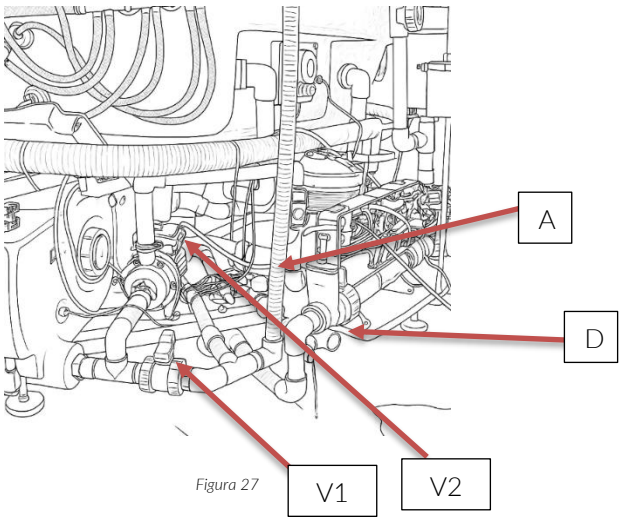

Figura 27

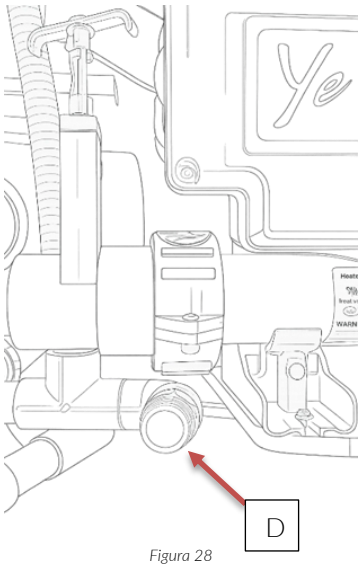

Figura 28

V1 = Linear drain valve for compensation tanks (Ø32 mm)

V2 = Linear drain valve for tub (Ø32 mm)

A = Fill line (3/4” male)

D = Drain and overflow (3/4” male)

13. INITIAL FILLING

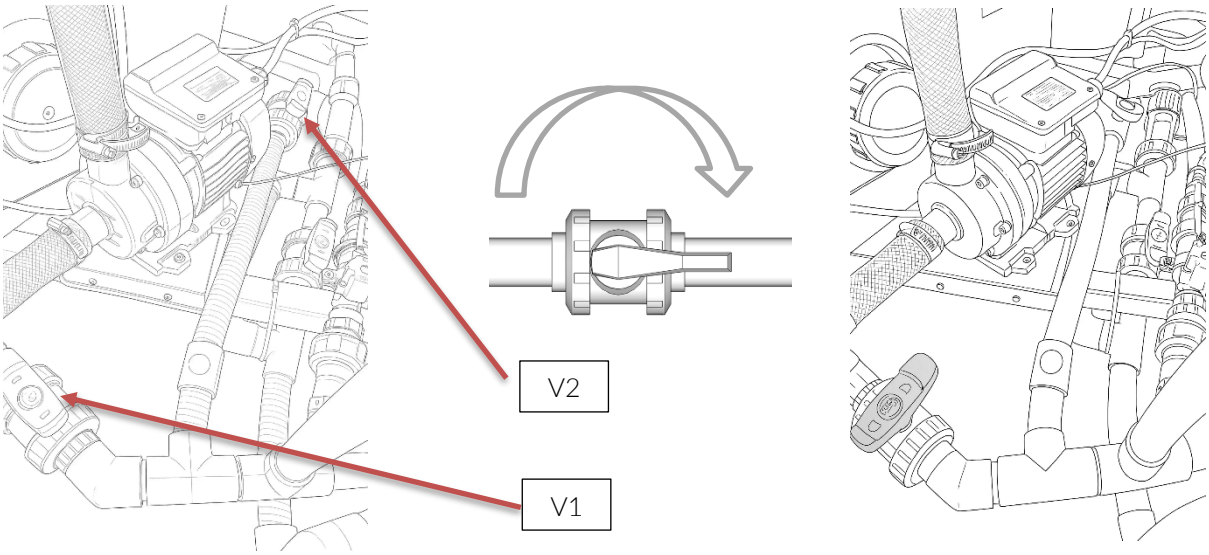

Figure 29

1. Close the compensation tank valve (V1).
2. Close the drain valve (V2).
3. Power the SPA electrically, without starting any device until the filling process is complete — that is, when the water reaches the upper edge of the tub and fills the compensation tank.
4. The "autotest" will automatically start to check the water level. If the autotest detects that the water level is below the minimum sensor, the fill solenoid valve will open.

   When the water level reaches the optimal sensor in the compensation tank, the solenoid valve will automatically close.
5. Check the incoming water values:
   - pH between 7 and 7,2;
   - alkalinity between 8 and 12,5°F;
   - hardness not exceeding 25°F.

   If values fall outside this range, adjust them using SPA products available at any specialized store.
6. Place bromine tablets for water disinfection in a floating dispenser (not supplied).

14. TOTAL DRAINING

1 Disconnect the power supply.

2 Before draining the tub, clean the cartridge filter.

3 Open the compensation tank valve (A). Open the drain valve (B).

4 Once both the tub and the compensation tank are completely emptied, clean them using a suitable cleaning product.

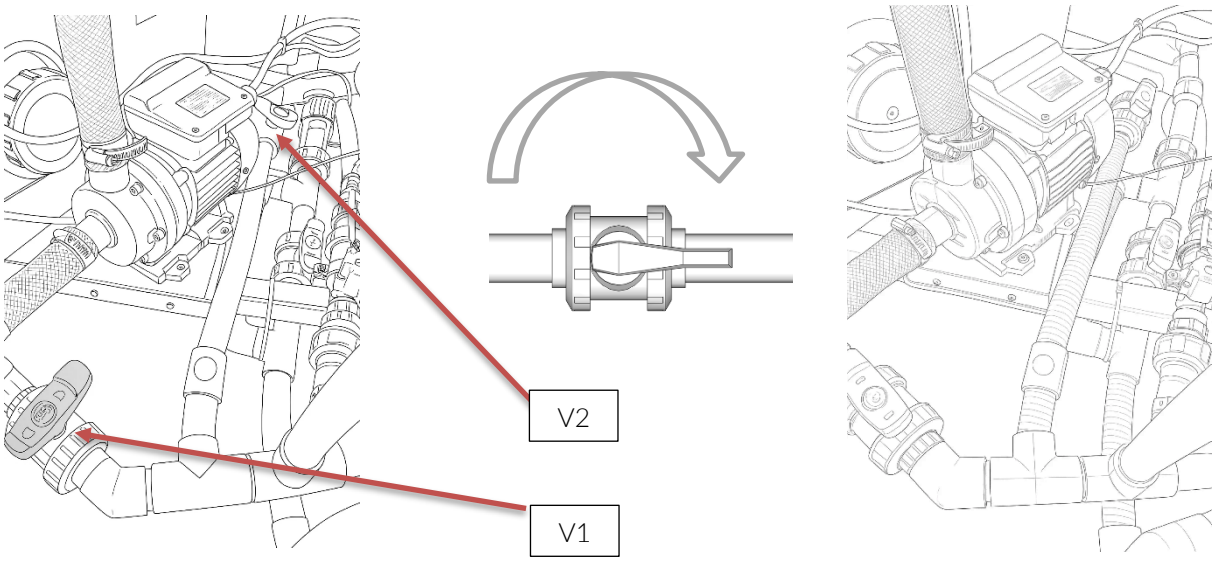

Figure 30

15. EMPTYING THE COMPENSATION TANK

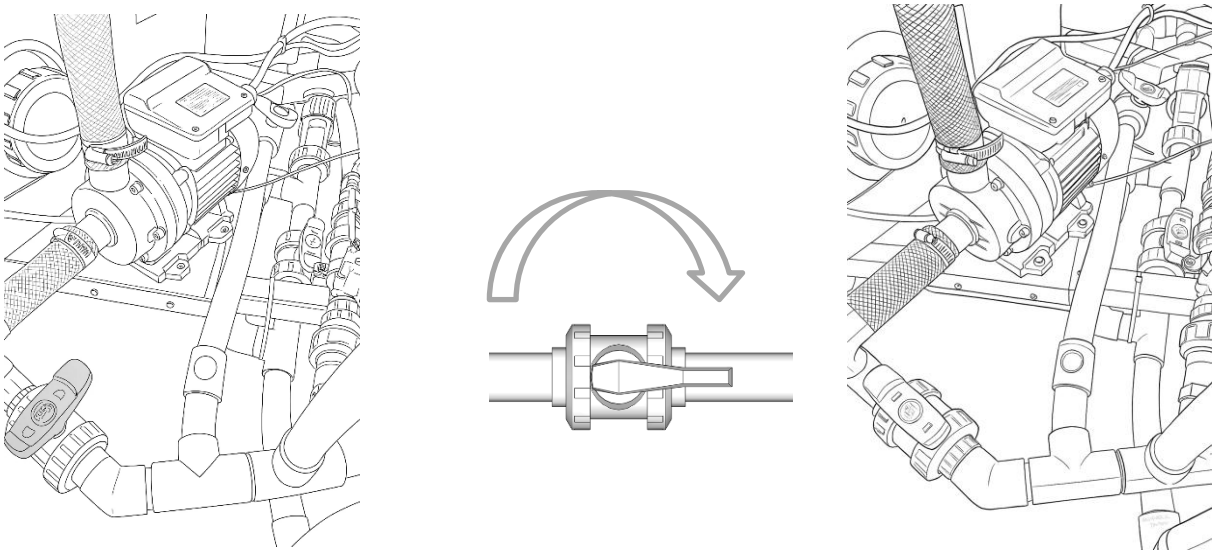

Figure 31 – svuotamento vasca di compenso

16. EMPTYING THE TANK

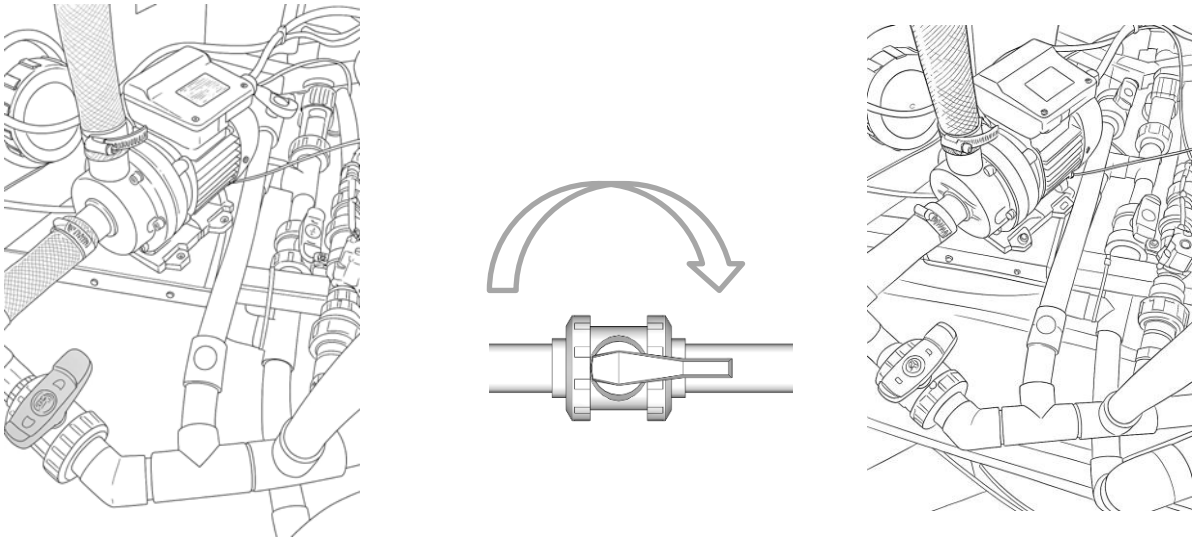

Figure 32 - svuotamento vasca

17. USE AND MAINTENANCE – SAFETY WARNINGS

This manual has been prepared to help you use your SPA safely and effectively, avoiding situations that could void the warranty.

Before using or maintaining the equipment, please read this manual carefully and keep it in a safe place for future reference by various operators.

If any parts are unclear, contact the Manufacturer for further explanations. Unauthorized interventions, tampering, or modifications that do not comply with the instructions in this manual may cause damage, injury, or fatal accidents and will void the warranty. Use or maintenance of the SPA carried out in ways different from those indicated in this manual may result in the cancellation of the warranty coverage.

Before performing any installation or maintenance, disconnect the equipment from the electrical and water supply.

Avoid placing any objects or substances on the SPA surfaces that could cause damage.

WARNING! RISK OF ELECTRIC SHOCK.

Do not place any electrical appliances, such as hairdryers, lights, radios, telephones, or TVs, closer than 1.5 meters to the SPA.

DANGER OF DROWNING!

To reduce the risk of accidents, do not allow children under 8 years old, people with reduced mental or sensory abilities, or those without experience to use the SPA unless under constant and close supervision.

Do not dive into the SPA: risk of serious personal injury and damage to the equipment.

WARNING!

To reduce the risk of injury:

- The SPA water temperature should never exceed 40°C to avoid hyperthermia.
- Water temperatures between 38°C and 40°C are still considered safe for a healthy adult. Lower temperatures are recommended for prolonged use (over 10 minutes), for children, or if bathing alone.
- To minimize risks, always dip your hand into the water to check its temperature and comfort before allowing children to enter the SPA.

- Pregnant women, whether confirmed or suspected, should consult a doctor before using the SPA.
- Individuals with infectious, skin, or contagious diseases MUST NOT use the SPA.
- People with health problems should consult a doctor before using the SPA, especially those with obesity, heart conditions, low or high blood pressure, circulatory problems, diabetes, coagulation disorders, pregnant women, etc.

Perform regular maintenance on your SPA while using personal protective equipment (e.g., gloves and safety glasses): this will optimally maintain the surfaces and functional parts and ensure maximum hygiene and safety during SPA use.

For routine maintenance, use only products recommended by the Manufacturer: detergents or disinfectants of different types could irreparably damage the surfaces and circuits of the SPA (damage resulting from the use of unsuitable products is not covered by the warranty).

During SPA maintenance, the presence or passage of unauthorized persons near the work area is not allowed.

Cleaning products and disinfectants, being potentially toxic if ingested or contacted, must be kept tightly closed and out of the reach of children or animals. When not in use, store these chemical products in their original labeled containers, tightly closed, in a cool place away from heat sources, and avoid exposing them to direct sunlight.

18. HOW TO PERFORM A HYDROMASSAGE

To obtain the best benefits, use the hydro massage a maximum of 3 times per week.

Before entering the SPA, take a quick shower to remove any greasy substances (e.g., sweat, body creams, etc.) that could contaminate the water.

Remove any dangling jewelry and tie back hair to prevent it from getting caught in moving parts.

Check the SPA water with your hand to ensure it is comfortable, and enter slowly and carefully, as the flooring and the SPA itself may be slippery.

Bathing in the SPA should never exceed 10 minutes.

Prolonged immersion in hot water can cause HYPERTHERMIA, which is excessive body overheating. The consequences of this condition may include drowsiness, increased body temperature, fainting, fetal harm in pregnant women, and unconsciousness with the consequent risk of drowning.

19. RECOMMENDED TEMPERATURES

The water temperature depends on personal preferences and the desired effect: Revitalizing effect: the water temperature should be set to 33°C (limit SPA use to a maximum of 10 minutes). If you intend to use the chromotherapy function, the most suitable colors are yellow and red.

Relaxing and draining effect: the water temperature should be set between 35-37°C (limit SPA use to a maximum of 10 minutes). If you intend to use the chromotherapy function, the most suitable colors are blue and green.

20. WHICH PRODUCTS TO USE

Use products suitable for small pools, easily available in specialized stores. DO NOT use foaming detergents, soaps, greasy lotions, or generally products incompatible with the materials of the SPA.

Alternatively, it is possible to use bath salts in moderate amounts and non-oily natural essences, ensuring that the product formulations are specifically designed for small pools. If, after using the products, the water becomes cloudy or foamy, change it and clean the walls of the SPA; then try using a different product or a smaller amount.

21. K500 CONTROL KEYPAD

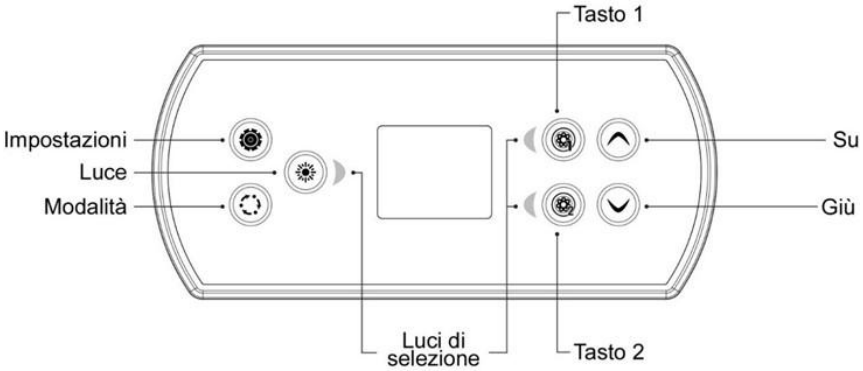

Figure 33

The functions of buttons 1 and 2 activate:

Button 1 – hydromassage pump

Button 2 – blower

Light button: turns the light on and off; if pressed in sequence, it changes color.

Settings button

One press gives access to a menu to manage the SPA settings. Refer to the settings section for details on the settings menu.

Mode button

The screen will return to SPA mode if no button is pressed for 60 seconds.

Screen activation

Press any button to turn on the keypad. After 30 minutes of inactivity, it will turn off.

Figure 34

Main screen

The main screen gives access to the accessories and displays the water temperature. At the bottom of the screen, any error or maintenance messages are shown.

Figure 35

Accessory activation

To start or stop an accessory, press the associated button. The icons light up when the corresponding accessory is on. The icons on the screen reflect the status of the accessories running on the SPA. The corresponding icons will be animated when one or more accessories are turned on.

Figure 36

Set the water temperature

The temperature shown at the top of the screen is the current water temperature. Use the Up and Down buttons to set the desired temperature. The set point will appear in blue at the bottom.

After 3 seconds without any change to the set temperature value, the keypad will return to the normal display.

When the set value is lower than the current temperature, “Cooling to XX.X” will appear. When the set value is higher than the current temperature, “Heating to XX.X” will be displayed.

Normally, there is a short delay before heating begins, during which “Heating Paused” is shown.

Settings menu

From the home page, you can access Settings, where the submenus are:

- • Water Care
  - Standby
  - Maintenance
  - Date and Time
  - Keypad
  - Wi-Fi
  - Configuration
  - Restore
  - Information

Figure 37

Use the arrow buttons to move up and down the list. To select an option, press the lit button next to it (Light button). At any time, you can press the Settings button to return to the home screen.

Water Care

The Water Care section allows you to set filtration and heating cycles using different programs described below. By selecting the program with the Light button, a check mark will appear on the corresponding icon.

In Economy mode, the set point will be reduced by 20°F (about 6.5°C, default value), meaning that the heating system will not be activated unless the temperature drops 20°F below the set temperature of the SPA. Filtration will also be reduced.

Away: In this mode, the SPA will always be in economy mode, and the set point will be reduced by 20°F (about 6.5°C).

Standard: The SPA will never be in economy mode and will filter according to the configuration of the control panel

EnergY: The SPA will be in economy mode during peak hours on weekdays and will return to normal mode on the weekend.

Super Energy: The SPA will always be in economy mode during peak hours, every day of the week.

Weekender: The SPA will be in economy mode from Monday to Friday and will operate normally on the weekend.

Figure 38

Figure 39

Modifying the programs

To view and/or modify a Water Care program, use Button 1 (on) to enter the corresponding program menu.

Select a program to modify using the Up/Down arrow buttons (selection of economy mode and filtration programs). Use the Light button to move between parameters.

There are different scheduling possibilities (Mon–Fri, weekend, every day or individual days).

The schedules will be repeated every week. Time and duration are set in 30-minute increments. After setting the schedule, use Button 1 to go back, making sure that the desired program is selected on the main screen.

The filtration scheduling shown on screen will be applied to the filtration pump

Figure 40

Maintenance

From the Settings page, you can access the Maintenance menu, which provides access to the following options:

- Maintenance reminders
- Standby

Use the Up and Down buttons to make a selection and the Light button to confirm.

Maintenance reminders

The screen will remind you to perform maintenance tasks on the SPA, such as rinsing or cleaning the filter. Each task has its own duration, based on normal use.

The Maintenance Reminders menu allows you to check the remaining time before maintenance is needed and to reset the timer once a task is completed.

Use the Up and Down buttons to scroll through the list. To reset a task, select it by pressing the Light button, then confirm when prompted.

Standby

Standby mode allows you to carry out maintenance on the SPA. The pumps will stop for 30 minutes and will automatically restart afterward.

Once Standby mode is activated, a screen will appear indicating that the pumps are stopped. The regular SPA display will return after the maintenance period.

Press Button 1 to exit Standby mode and restart the SPA.

Note: In version 6.00 only, Standby mode is accessible directly from the Settings page.

Date and time

In this section, you can adjust the time format, and change the year, date, and time. Use the arrow buttons to select the setting you want to adjust and press the Light button to select it.

Use the arrow buttons to modify the values and the Light button to move between parameters. Button 1 allows you to return to the main menu.

Note: In version 6.00 and earlier, only the day of the week can be changed, not the year or full date.

Figure 41

Impostazioni del tastierino

In this section, you can change the temperature unit, language, display orientation, keypad border light color, and set the keypad security level. When changing the display orientation, the options and arrow keys will adapt to the selected orientation.

If there are no accessories installed on the SPA, the Mode button can be used to change the display orientation.

If the keypad is equipped with a module for selecting the perimeter light color and the “RGB Backlight” option is enabled in the SPA configuration, an option will appear to allow selection of the keypad border color.

You can lock the keypad by selecting one of 3 security levels: Unlocked, Partial, or Full. The Partial level blocks set point adjustment and many options in the settings menu.

Figure 42

The Full level blocks all keypad functions. To unlock the keypad (partial or full), press and hold the Light button for 5 seconds.

If power to the keypad is interrupted, a message will appear at startup prompting the user to reprogram the date and time.

Error messages

The following list shows the different error messages that may appear on the main screen. Refer to the troubleshooting and error code section of the control panel manual.

Code	Message	Solution
HL	Warning! “High limit” error, excessive overheating	Disconnect the SPA from power and contact Customer Support
FLO-LO1 / FLO-LO2 / FLO	Flow anomaly – Check filter, pump, blockage, air lock, and water level	Disconnect the SPA from power and perform checks. If the error persists, contact Customer Support
NO FLO	Continuous NO FLO, system off – Check filter, pump, blockage, air lock, and water level	Disconnect the SPA from power and perform checks. If the error persists, contact Customer Support
HR	Warning! Stuck relay	Contact Customer Support
OH	Warning! High water temperature	Add cold water
Pr	Warning! Faulty temperature probes	Contact Customer Support
AOH	High internal system temperature	Disconnect the SPA from power and wait for the system to cool down. If the error persists, contact Customer Support
FLC	Flow switch off or malfunctioning	Contact Customer Support
SP in	Input voltage problem	Contact Customer Support
SC ER	Error detected during learning mode	Disconnect the SPA from power, wait a moment, then restore power. If the error persists, contact Customer Support
F1	Fuse no. 1 blown	Replace the fuse with one of identical specifications
F2	Fuse no. 2 blown	Replace the fuse with one of identical specifications
F3	Fuse no. 3 blown	Replace the fuse with one of identical specifications
Hr	Warning! Thermal fuse error	Disconnect the SPA from power and contact Customer Support
UPL	The SPA control panel does not have valid software. Insert a valid in.stick to reprogram the panel	Contact Customer Support

Extra maintenance

In case of keypad replacement, access the main menu to the Configuration section and set Configuration 20 in the submenu. For further details, refer to the dedicated keypad manual.

22. MAINTENANCE AND WATER TREATMENT

The SPA water must always be clean, clear, and bacteriologically pure: this ensures safety for users and a pleasant experience.

Contaminants in the water can be of two types:

1) Microorganisms (bacteria, algae, etc.) present in the atmosphere and the water itself, as well as those introduced by bathers. If the water is not properly filtered and disinfected, there is proliferation of these microorganisms, mainly vegetative (algae). The consequences are a green coloration of the water and a deposit of organic, viscous, and slippery substances on the surface of the tub.
2) Inert solid substances: dust, soil, hair, etc. brought by wind, rain, and bathers.

These contaminations increase:

- in the presence of high temperatures,
- if the pool is installed outdoors,
- if it is used by a large number of people,
- if its parameters (hardness, pH, alkalinity) are not well balanced with each other..

It is therefore FUNDAMENTAL to regularly perform these operations:

Check the fundamental parameters of the water (pH, hardness, alkalinity) using reactive strips easily available in specialized stores: if the three parameters are not perfectly balanced, greater quantities of additives and disinfectants and therefore of maintenance may be necessary.

For example, excessively alkaline water makes it difficult to keep the pH stable; in turn, an unstable pH predisposes to the formation of algae and therefore requires the use of algaecides in quantities higher than normal.

Below are the optimal values:

- pH between 7-7.2;
- alkalinity between 8-12.5 °F;
- hardness not exceeding 25 °F: it can be kept under control with the use of specific scale sequestrants or by installing softeners on the water intake system.

Filling the tub

The connection of the filling line to the tub must be made to a potable water network with chemical-physical and microbiological characteristics compliant with those previously

indicated, according to the regulations in force in the country of installation. Note: in case of hard water (above 18 °F), the use of a softener is recommended to prevent scale formation ($CaCO_3$).
For the procedure see the INITIAL FILLING paragraph.

Disinfection and cleaning of the water

Add disinfectant products (e.g. bromine, oxygen...) to the water able to eliminate bacteria and fungi and additives to make it clearer and more crystalline (e.g. algaecides, anti-foam, flocculants, etc.). Periodically the water should be checked to see if the concentration of these products is sufficient to guarantee effectiveness.
The products used must be compatible with the construction material of the SPA. The use of different products could cause damage to the surfaces over time that are not covered by the warranty. During the use of the products always use personal protective equipment (e.g. gloves and protective glasses).
Do not use the SPA until the level of disinfectants and additives is safe for bathing (refer to the labels of the products). Keep the hydromassage running to allow a faster distribution of the disinfectant or additive.

Cleaning the internal surfaces of the tub, visible contaminants (e.g. leaves, hair)

Before carrying out maintenance disconnect the power supply of the SPA.
To perform an effective and safe cleaning it is necessary to empty the SPA (see page 22).
Do not leave the SPA empty in DIRECT SUNLIGHT. The surface temperature of the SPA could exceed 80°C if left exposed to the sun and cause serious damage, including deformation and cavitation of the surface and components (damage caused by direct exposure to sunlight is not covered by the warranty).
For cleaning the surfaces use soft cloths and neutral products suitable for the material of the tub: they are easily available in any specialized store: follow the usage instructions indicated on the label of the product used. Always finish with a perfect drying preferably with chamois leather.
Avoid abrasive, aggressive cloths and detergents (e.g. solvents or acetone) or alcohol-based products. Do not use descaling products as they are too aggressive.
To restore the brightness of the surfaces or remove resistant stains (e.g. nicotine), it is possible to apply car polish spread with cotton wool.

Checking and replacing the paper filter cartridge

Before cleaning the cartridge disconnect the power supply of the SPA. The paper filter is composed of a cylindrical cartridge made of cellulose and polyamide. Cleaning/replacing the paper filter depends on the frequency of SPA use. Generally, rinse the cartridge every 2-3 weeks and replace it at every water change: when replacing, it is recommended to dispose of dirty cartridges according to the regulations in force in the country of use.

To clean, remove the cartridge from the filter and wash it with clean water to remove accumulated dirt. Optionally soak the cartridge in a solution suitable for cleaning this type of filter for at least 8-10 hours. Always refer to the instructions provided by the manufacturer of the cleaning product used.

At the end of cleaning, wait for the cartridge to dry and place it back in the designated compartment.

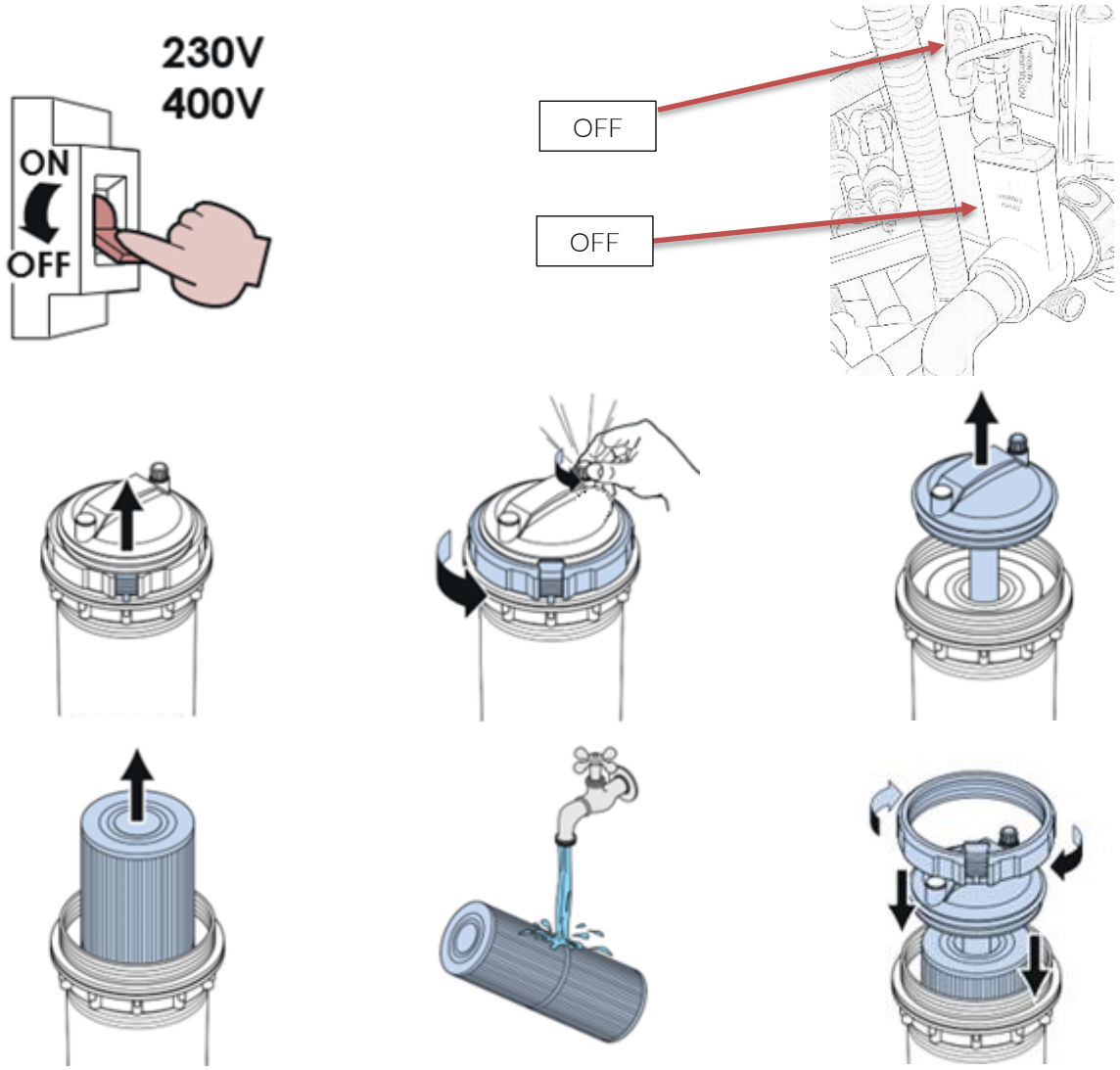

Figure 43

Periodic draining

Since the SPA contains a relatively small amount of water, the concentration of pollutants such as oils, creams, sweat, dirt, etc., can become very high.
For this reason, the water must be changed and replaced at most every one to two months depending on use. The following formula can be used to approximately evaluate how often to drain the tub: Capacity (liters) ÷ Number of bathers (daily average) ÷ 12 (experimental constant).
Example:
1200 liters (tub capacity) + 120 liters (compensation tank capacity) with a daily average of 3 people. (1200 + 120) ÷ 3 ÷ 12 = 36.6
Drain the SPA every 36 days.
Draining is also recommended in case of prolonged non-use of the SPA since long periods without water treatment are harmful. Before proceeding with the draining, make sure that the values of chemical additives dissolved in the water are not different from the allowed ones.
If in doubt, contact local authorities. Do not discharge the water into a septic tank.

23. COLD OUTDOOR ENVIRONMENTS

When temperatures drop below +10 °C during nighttime hours when the SPA is not in use, cover the SPA with the appropriate cover provided as an option.
If the SPA is used mainly with outdoor temperatures below +10 °C, it is recommended to connect it with a heat exchanger.

24. WINTER SHUTDOWN IN COLD CLIMATES

In environments where winter temperatures frequently fall below freezing, during the period when the SPA is not used, proceed as follows:

1) Disconnect the main electrical panel.
2) Drain the SPA.

WARNING:

1) Remove any standing water from the seats and bottom of the tub using a sponge.
2) Remove water residues from the circuit: these can be suctioned with a liquid vacuum pump or pushed out with air using a compressor, through the hydro-massage and suction nozzles.

3) Remove and clean the filter cartridges (see the sequence illustrated in the following pages) and store them in a dry environment.
4) Cover the SPA to prevent it from getting dirty.
5) Before using the SPA again, refer again to the pages of this manual.

25. WINTER SHUTDOWN IN WARM CLIMATES

In warm environments, where the temperature only occasionally drops below freezing, the SPA can be left filled with water because it has antifreeze protection.

Do not disconnect the power; it is recommended to set the minimum heating temperature (15 °C).

26. "CHANNEL" CLEANING

To access the "channel" in the "free-standing" version, you need to lift the SPA cover and rest it on the rotating supports.

This operation requires 3 people.

1) Grab the inner edge of the cover, positioning yourself near the feet with the rotating supports (see Figure 44).
2) Lift the cove.
3) With one foot, turn the rotating supports outward.
4) Rest the cover on the supports.
5) Clean the "channel".

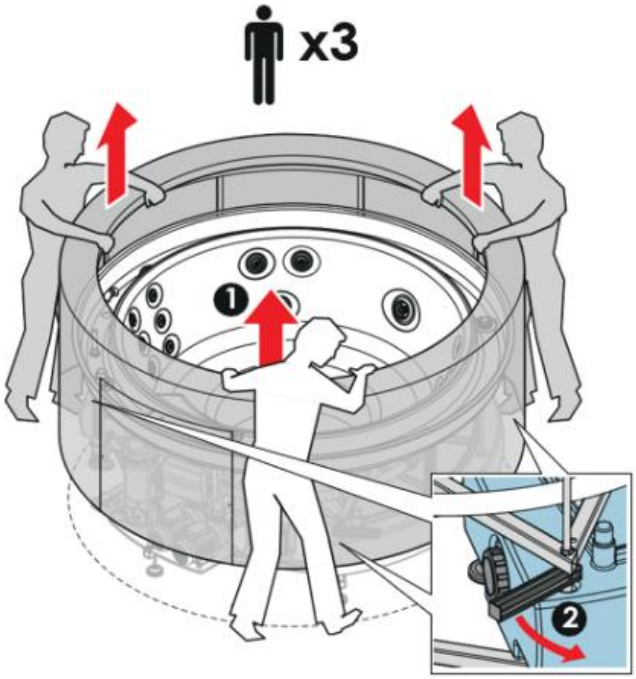

Figure 44

27. TROUBLESHOOTING

Presence of algae

Algae are a common problem in small pools; they appear as small flakes similar to paper filaments that, besides being unpleasant to touch and see, require high use of chemical products. The presence of algae is due to either insufficient disinfectant or poor water balance (e.g., unstable pH or excessively alkaline water). It is important not only to constantly maintain disinfectant levels in the water but also to ensure proper circulation.

Cloudy water

Water can become cloudy for several reasons:

1. High amount of dissolved solids

   Total dissolved solids (TDS) are present in all pools. These solids consist of salts that concentrate in the water due to evaporation and organic substances mainly introduced by bathers. The ideal value is 0 ppm TDS, but a range between 0 and 1500 ppm is acceptable. When TDS concentration becomes too high (above 1500 ppm), chemical sanitation becomes more difficult as dissolved substances protect bacteria; consequently, the water becomes cloudy.

   Dissolved solids accumulate due to heavy use, excessive addition of chemicals over time, or excessive evaporation (e.g., if the SPA is installed outdoors in very hot areas). The best solution is to replace the water.

2. pH too high

   A pH above 7.2 can cause water cloudiness. Lower the pH to the correct level of 7–7.2 using products specific for small pools.

3. Insufficient filtration

   Check the filter weekly for function and cleanliness. If the filter is dirty, water flow decreases, reducing efficiency. The filter should be cleaned at least every 2–3 weeks.

Water not clear or with abnormal coloration

Incoming water may contain metals such as iron, manganese, copper, etc. To prevent stains caused by oxidation, use specific products for small pools or install a demineralizing filter on the incoming water line.

Eye and skin irritation

1. pH too high

   High pH can irritate skin and eyes. Correct by adding specific products for small pools.
2. pH too low

   Low pH can also cause irritation to eyes and skin. First check total alkalinity: if within 80–120 ppm CaCO3 (calcite), raise the pH by adding specific products for small pools to bring it back to 7–7.2. Low pH is less common and generally more difficult to treat than high pH because alkalinity also affects the pH corrector's effectiveness.
3. Lack of sanitizers

   Bacteria and microorganisms can enter skin pores causing rashes and superficial infections. Ensure disinfectant concentrations are adequate.

Presence of foam

Foam formation is common in small pools due to strong water agitation, dissolved solids, and water hardness. To solve this, use defoamers, easily found in specialized stores. If the problem persists, check water hardness (optimal value not above 25°F). In extreme cases, replace the water.

Unpleasant odor

The odor is usually caused by pH problems or disinfectant buildup (especially chlorine-based). Check pH and disinfectant concentration. It can also be caused by high total dissolved solids (TDS) concentration in the water.

Scaling

Scaling is a common problem. These deposits can clog or coat various parts of the system (heating elements, pipes, filter, etc.) and reduce water flow and system efficiency to the point of requiring costly repairs or replacement of damaged components. Scaling is usually caused by dissolved calcium that precipitates as calcium carbonate when the pH is too high or there are too many dissolved salts. To prevent this, maintain the pH at 7–7.2 by adding specific products and install a demineralizing filter on the incoming water (optimal hardness value: not exceeding 25°F).

Surface stains

Dirt on the waterline and residue deposits are caused by dissolved solids precipitating in the water or by oils and creams from bathers. They can be removed by draining the SPA and washing the surfaces.

Excess sanitizer

If the disinfectant concentration exceeds the recommended levels, using the tub can be dangerous. To reduce it, activate the circulation, hydromassage, and blower for 15–30 minutes. Check the disinfectant level again. Remove any undissolved bromine tablets inside the cartridge filter.

28. AUTOMATIC FILL SYSTEM BLOCK

In case of malfunction of the automatic filling system, check the operational status of the float level sensor installed in the compensation tank (see Figure 45), the operational status of the filling solenoid valve as well as the control panel (see the following electrical diagram, fig. 48).

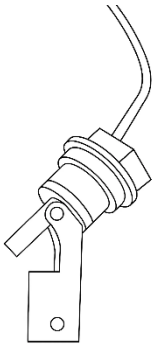

Figure 45 – sensore di livello

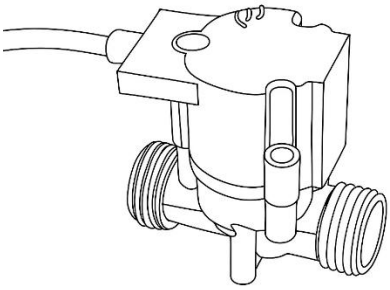

Figure 46 – valvola di carico

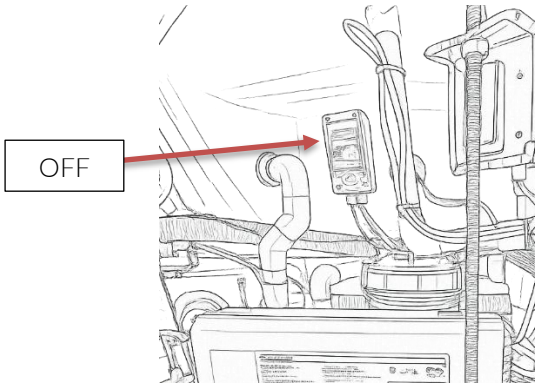

Figure 47 – quadro di

29. ELECTRIC PANEL

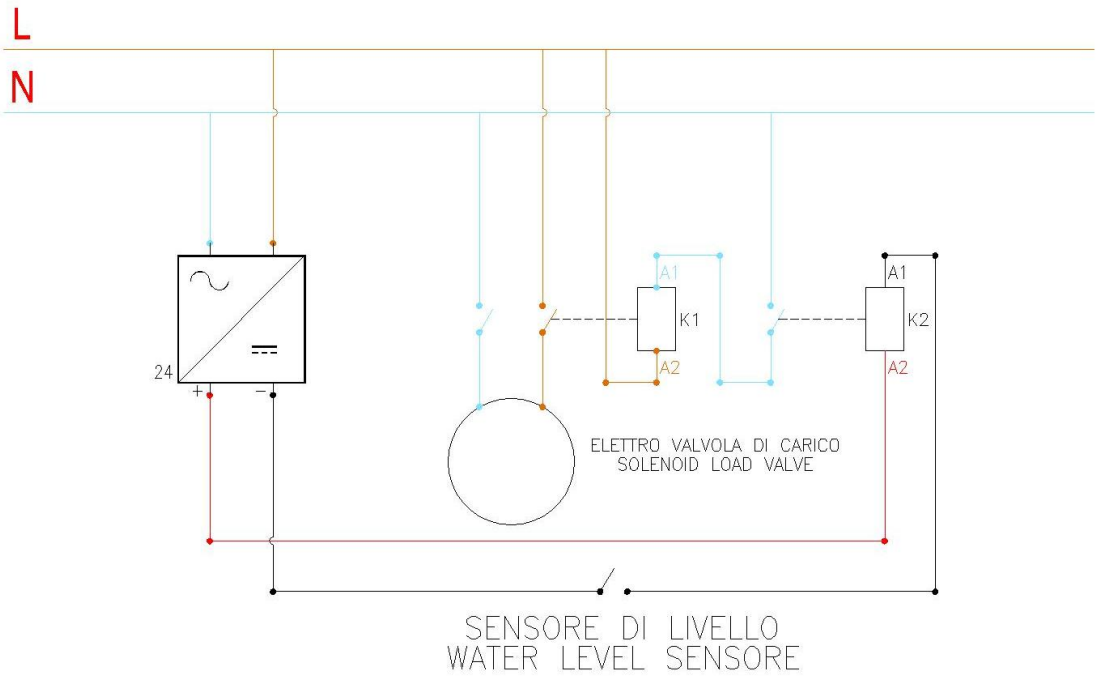

Figure 48

30. ELECTRICAL CHARACTERISTICS

Circulation pump 0.2kW 1.2A 230V 50Hz

Blower 0.7kW 3.3A 220-240V 50/60Hz

Hydromassage pump 1.5kW 7A 220-240V 50Hz

Ozone generator 5W 110-240V 50/60Hz

31. SPARE PARTS

600-10809 YES5 control panel with K506 panel

610-11975 Circulation pump

600-10714 Hydromassage pump LP200

600-10716 Blower

610-12022 Level control panel

600-10776 Ozone generator

610-12008 Filter cartridge for Quadrat and Minipool

1091149 Level sensor

610-12028 Check valve

610-12026 Mini pool RGBW LED projector cable

610-12027 Mini pool RGBW LED projector body

1035958 LED light module 12 VAC/12 VDC

The SPA serial number plate is located as shown in Figure 49.

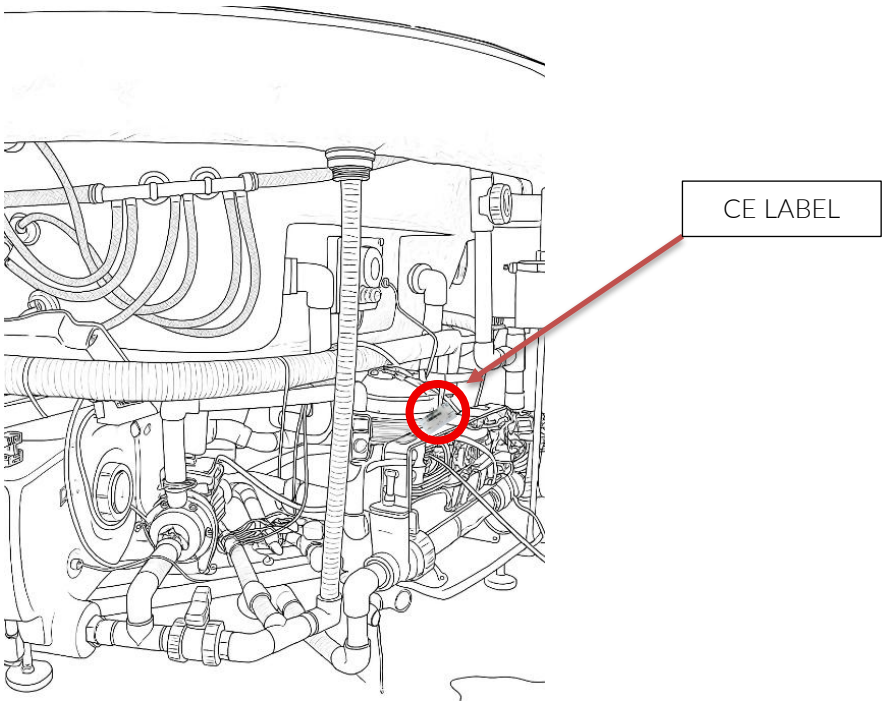

Figure 49

32. WARNINGS

The following safety signs (not supplied) and/or equivalent texts according to ISO 20712-1 must be permanently affixed on the SPA or within 2,000 mm from the SPA in a clearly visible position:

Adult supervision

No diving

Read the user manual

Do not insert fingers into the massage jets

Figure 50

Notes

- All images are reproduced for illustrative purposes only.
- C.P.A. srl reserves the right to change, in whole or in part, the product characteristics and the content of this document without any prior notice